EUGENE O'BRIEN

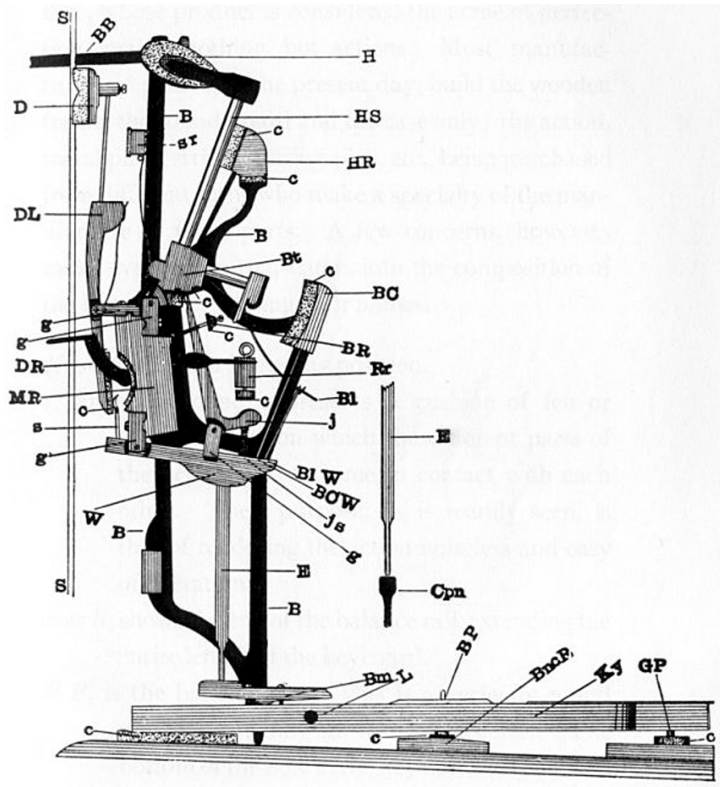

CLOSE HARMONY

TWO PIANOS

CODEX NUOVO

The purchase or rental of this work does not in any way convey the right of public performance. To secure this right, a license must be obtained from:

ASCAP
American Society of Composers, Authors, and Publishers
250 W. 57th Street
New York, NY 10107

General ASCAP licensing inquiries should be directed to
(212) 595-3050, or licensing@ascap.com

Program Note

Close Harmony is a lively, intense and occasionally whimsical nine-minute etude for two pianos. In the first of two double meanings, the title refers to the close-position major and minor triads and commonplace harmonic progressions that form the core of the work's ordinary and even banal vocabulary. Familiar to every first-year music theory student (I-IV-V-I) and aficionado of three-chord rock, these triads and progressions erupt into melodies and dense chords that eventually encompass all twelve pitches of the chromatic scale, chords and melodies that clash with the simple triads from which they sprouted.

At the same time, the etude is a tour de force of keyboard acrobatics and rhythmic intricacy, both of which suggest the second meaning of the title: the close, intense ensemble coordination and harmony demanded of the two pianists.

Commissioned by the Cleveland Fine Arts Duo (Jacqueline Platten, Marshall Griffith) and premiered by the Duo in 1986, *Close Harmony* is dedicated to the memory of the American pianist Paul Jacobs, a champion of 20th-century music, frequent two-piano partner of Ursula Oppens, and official pianist of the New York Philharmonic from 1961 until his untimely death in 1983.

—*Eugene O'Brien*

To the Memory of Paul Jacobs

CLOSE HARMONY

FOR TWO PIANOS

EUGENE O'BRIEN

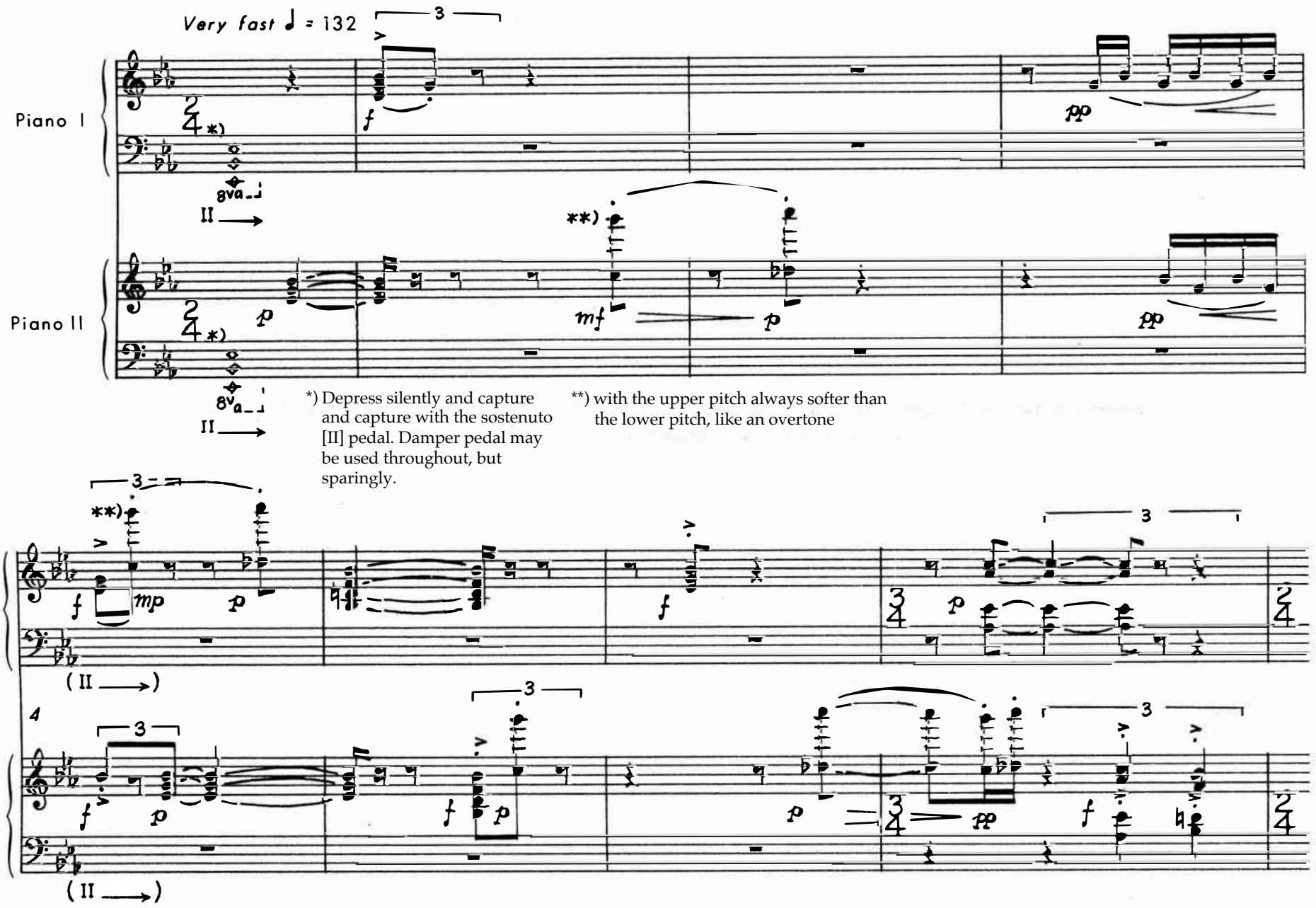

Copyright © 1986 by Eugene O'Brien. All Rights Reserved.

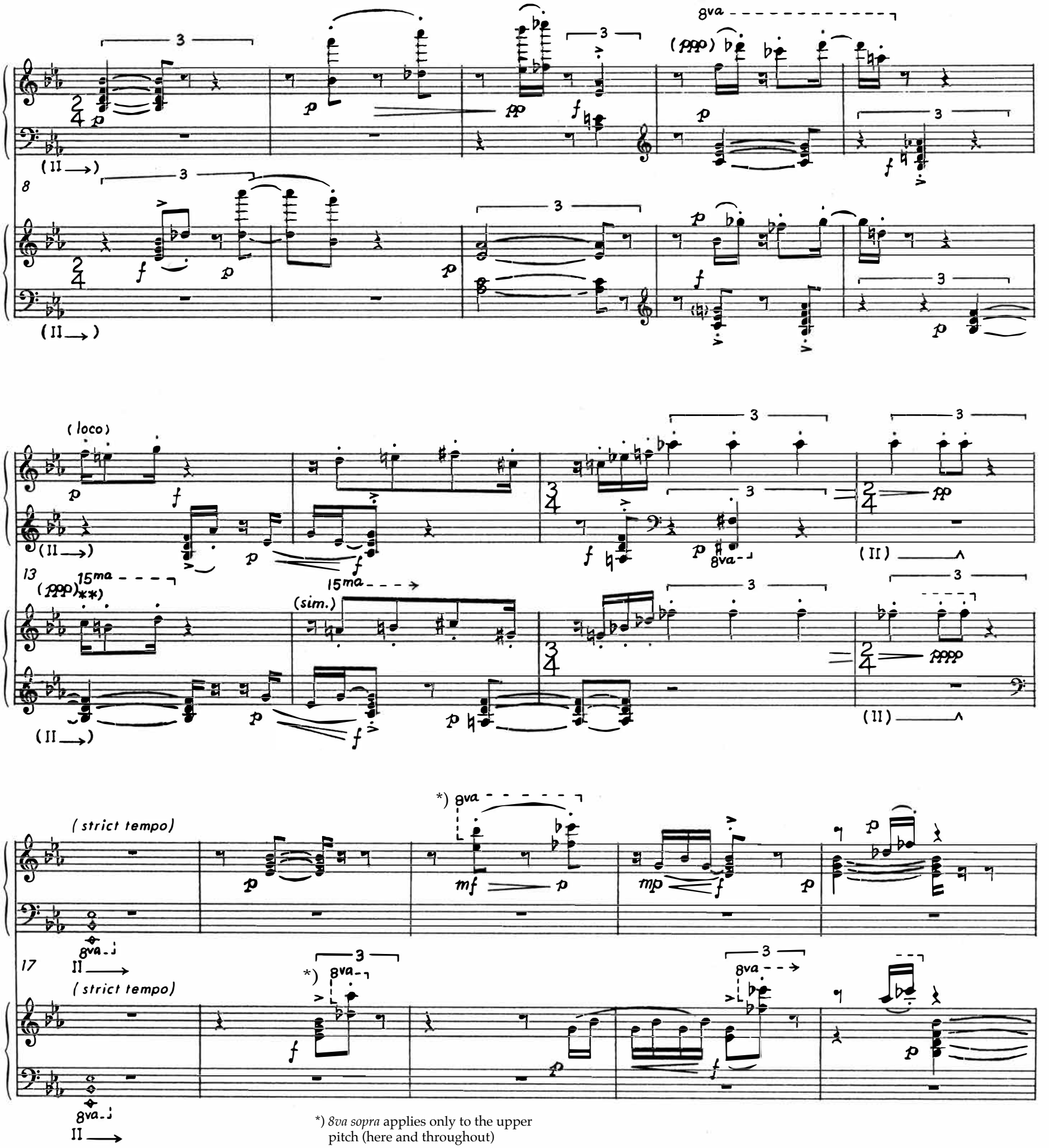

*) *8va sopra* applies only to the upper pitch (here and throughout)

22

*) 2/3rds of a quarter-note triplet (i.e., the final quarter-note of the triplet is missing)

27

31

35

40

45

49

53

57

61

64

68

72

76

80

84

88

92

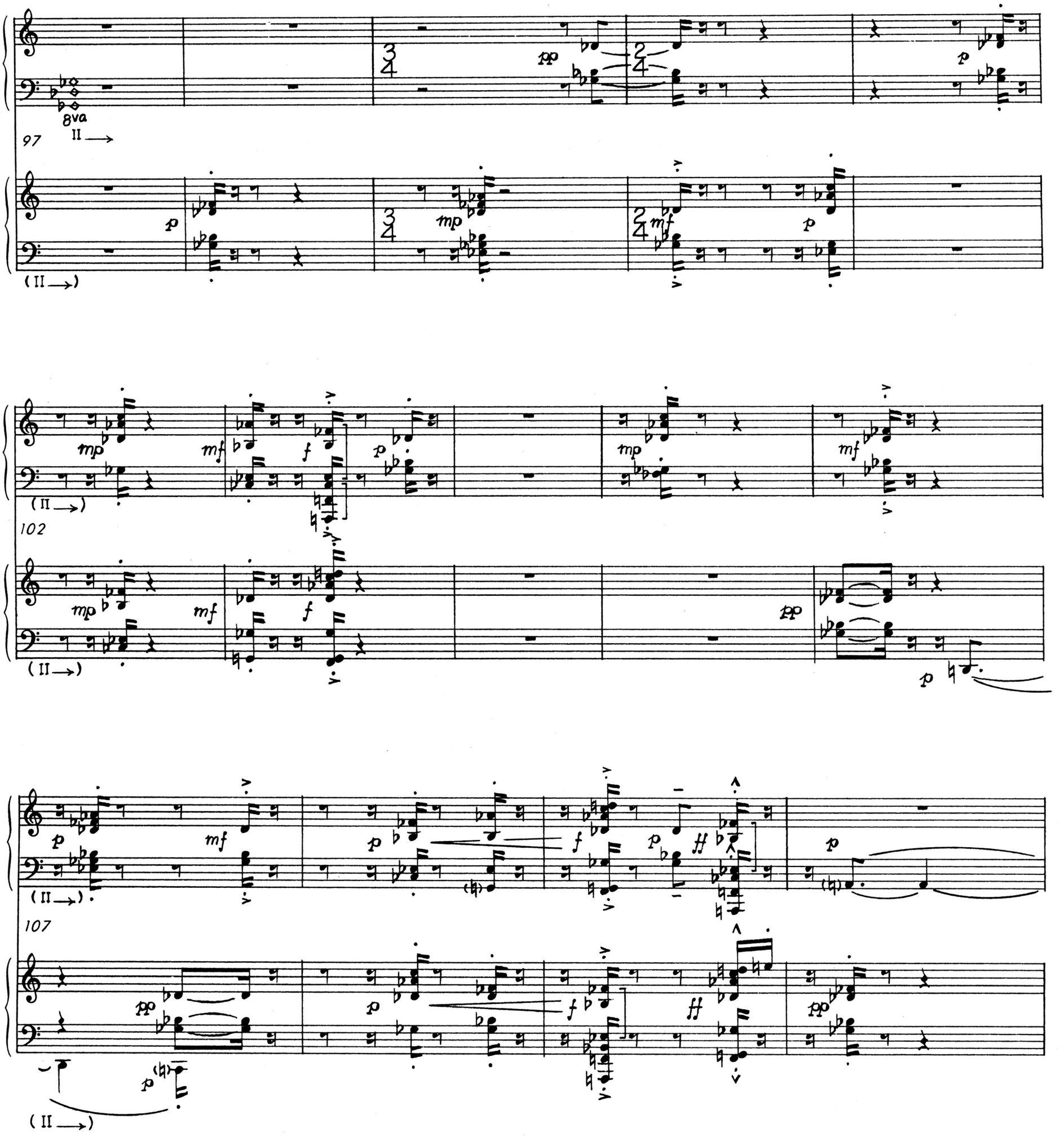
8va
97
II →
(II →)
102
107